HCM Series

Water Supply & Pressure Pumps | Horizontal Multistage Pumps

Residential | Industrial | Commercial

HCM2-40

Application

- Household water supply & irrigation
- Rainwater tank pumpset
- Water transfer
- Pressure boosting

Features

- Automatic pressure controller
- Run dry protection
- Quiet operation

Construction

- Stainless steel impellers, chambers & shaft
- NBR carbon / ceramic mechanical seal
- IP55 motor
- Insulation class F
- Heavy duty brass coupling

HYJET PUMPS 3 YEAR WARRANTY

AS4020 Certified for potable water

HCM2-60

HCM4-60

HCM Series Horizontal Multistage Pumps are a must for higher pressure applications with a quiet and reliable operation. They have been constructed to withstand harsh conditions and come with IP 55 rated motors, stainless steel chambers, impellers and motor shaft.

The HCM series are AS4020 Certified for potable water applications and are available in 4 – 6 stage models making them ideal for pumping water in residential, commercial and industrial applications.

Performance

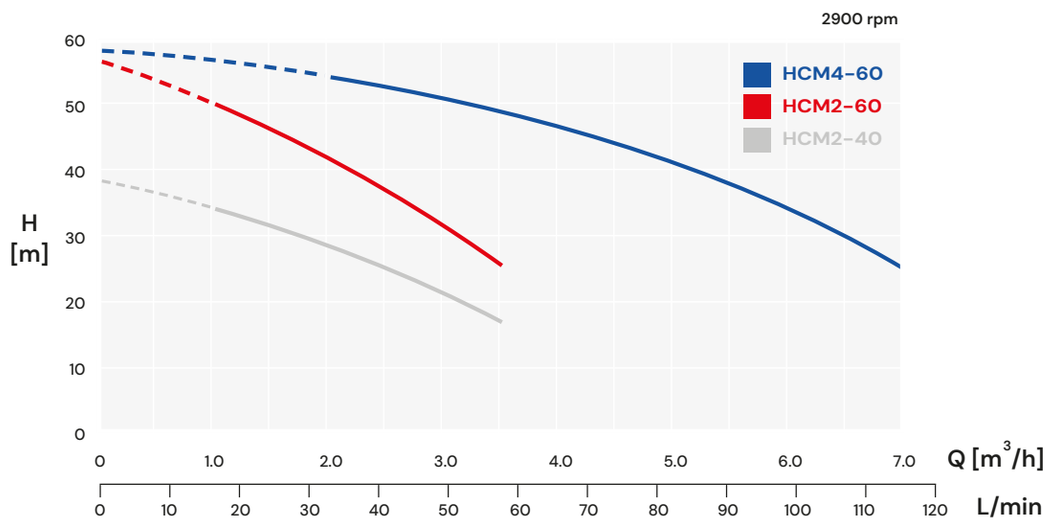

Technical Data

Model	Power (P2) (kW)	Amps (A)	Max. FLOW (L/min)	Max. HEAD (m)	Inlet / Outlet	Water Temp	Tap Qty
HCM2-40	0.55	4.2	58	38	1" x 1"	0 - 70°C	4
HCM2-60	0.75	5.2	58	56	1" x 1"	0 - 70°C	6
HCM4-60	1.1	6.8	116	58	1 ¼" x 1"	0 - 70°C	8 - 10

Dimensions
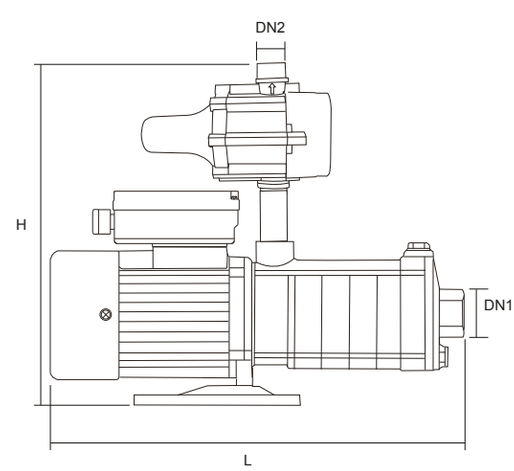
Model	H (mm)	L (mm)	DN1	DN2	G.W (Kg)
HCM2-40	385	360	25F	25M	13.7
HCM2-60	385	395	25F	25M	15.1
HCM4-60	380	443	32F	25M	17.0