ALLPROOF INDUSTRIES

DESCRIPTION	
CODE	FINISH
SCUP50	POLYETHYLENE

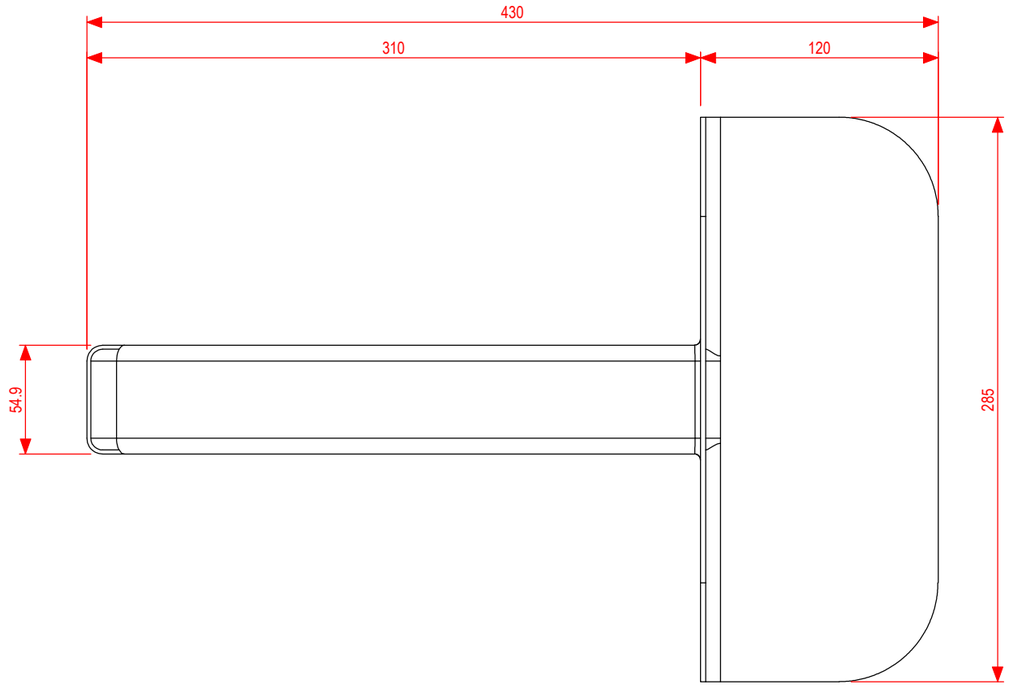

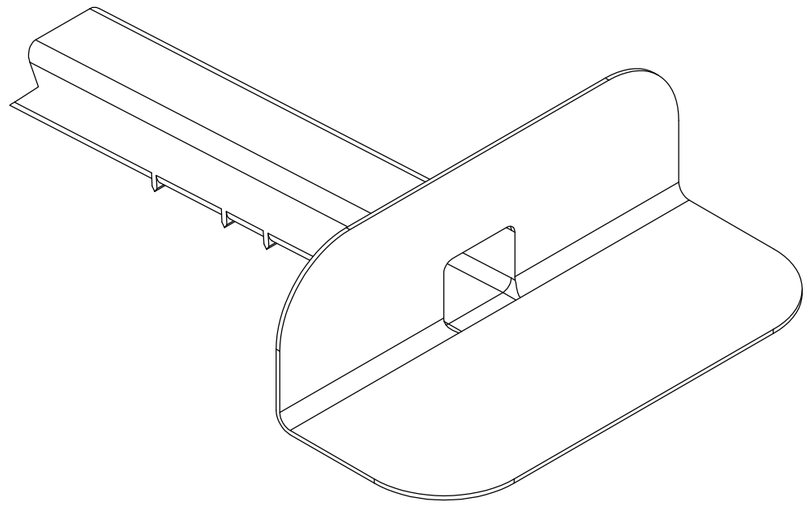

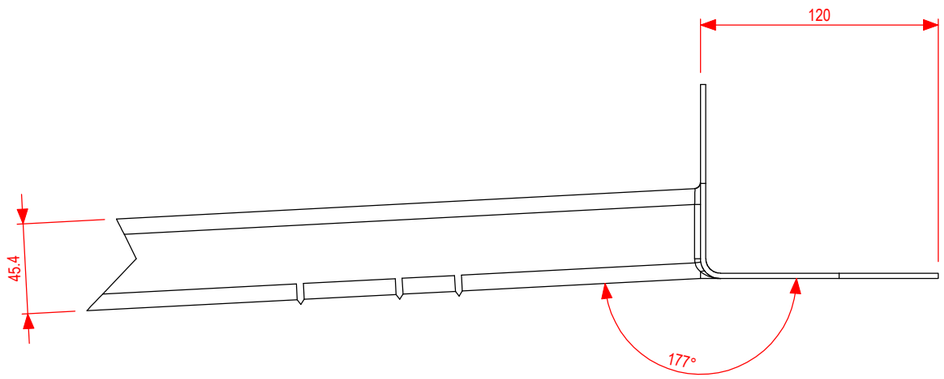

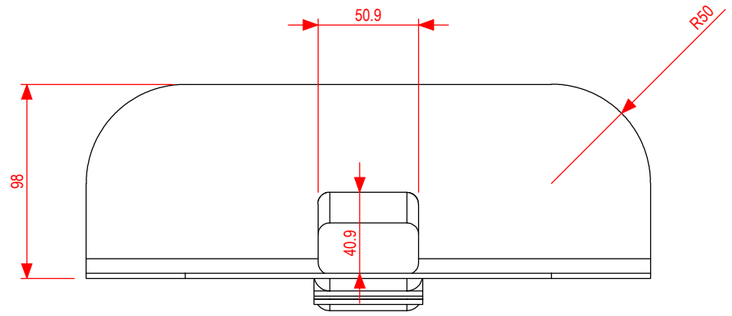

REVISIONS	CHANGES	DRAWN	DATE
XXX	XXX	S.L.	XXX

DO NOT SCALE DRAWING	
REQUESTED J.M	DATE 1.4.2014
DRAWN S.L.	DATE 2.4.2014
APPROVED	DATE
MATERIAL	

TITLE: 50X40MM SCUPPER DRAIN

APPLICABLE STANDARD(S):

PART NUMBER: SCUP 50

TOOL NUMBER	0.0
PART WEIGHT(GRAMS)	0.0
FILE	S/CAD FILES/2014/DIVERSE/SCUP50

A3 | UNITS = MM | SCALE : NTS (UOS) | SHEET 1 OF 1

DISCLAIMER : THE DESIGN SUGGESTION IS PROVIDED FOR EVALUATION PURPOSES ONLY.

IT IS NOT TO BE CONSIDERED A FULL DESIGN AS WE ARE NOT THE CONSULTING ENGINEERS; WE ARE MANUFACTURERS. WE ARE NOT PRIVY TO ALL THE INFORMATION PERTAINING TO THIS MATTER AND WE HAVE NO CONTROL OVER THE PROJECT INSTALLATION OF THE PRODUCT. THE DESIGN SUGGESTION IS PROVIDED WITHOUT OBLIGATION. DESIGN IS TO BE CONFIRMED AND APPROVED BY THE ARCHITECT, HYDRAULICS ENGINEER, OR PROJECT MANAGER. ACCURATE MEASUREMENTS SHOULD BE CONFIRMED BY THE PERSON APPROVING THE DESIGN. ALLPROOF ACCEPTS NO LIABILITY FOR THE IMPROPER USE OF THE DESIGN SUGGESTION.